For Commercial and Institutional Applications

Job Name _____ Contractor _____

Job Location _____ Approval _____

Engineer _____ Contractor's P.O. No. _____

Approval _____ Representative _____

LEAD FREE*

Series 77F-DI-250

Flanged, Wye Pattern, Ductile Iron Strainers

Sizes: 2" – 12"

Series 77F-DI-250 Flanged, Wye Pattern, Ductile Iron Strainers feature a one-piece cast body, bolted cover flange with flat gasket seal, 304 stainless steel perforated screens and a drain/blow-off connection plug.



77F-DI-250

Features

- Flanges conform to American Cast Iron Flange Standard, Class 250 (ANSI B16.1)
- Body meets ASME standards
- One-piece lead free* cast body
- Equipped with bolted cover flange that utilizes a flat gasket seal
- Upper and lower machined seats
- 304 Stainless steel perforated screens
- Drain/Blow-off connection furnished with plug
- Generous screen area and properly proportioned straining chamber to minimize initial pressure drop while maximizing time between cleanings

Specifications

A flanged, wye pattern, ductile iron strainer to be installed as indicated on the plans. The strainer must have a one-piece cast body, bolted cover flange, machined seats, 304 stainless steel perforated screens and a drain/blow-off plug. Pressure rating no less than 500psi (34.47 bars) WOG non-shock and 250psi (17.2 bars) WSP. Strainer body and flanges shall conform to American Cast Iron Flange Standard, Class 250 (ANSI B16.1). Strainer shall be a Watts Series 77F-DI-250.

Pressure – Temperature

Temperature Range: -20°F (-28.9°C) - 406°F (208°C)

Maximum Operating Pressure:

500psi (34.47 bars) WOG, non-shock, @ 150°F (66°C)

250psi (17.2 bars) WSP @ 406°F (208°C)

Standard Screens

2" – 3": $^{3}/_{64}$" perforation

4" – 12": $^{1}/_{8}$" perforation

NOTICE

The information contained herein is not intended to replace the full product installation and safety information available or the experience of a trained product installer. You are required to thoroughly read all installation instructions and product safety information before beginning the installation of this product.

NOTICE

Inquire with governing authorities for local installation requirements

***The wetted surface of this product contacted by consumable water contains less than 0.25% of lead by weight.**

FLTR Purple Engineering

Watts product specifications in U.S. customary units and metric are approximate and are provided for reference only. For precise measurements, please contact Watts Technical Service. Watts reserves the right to change or modify product design, construction, specifications, or materials without prior notice and without incurring any obligation to make such changes and modifications on Watts products previously or subsequently sold.

WATTS®

Materials

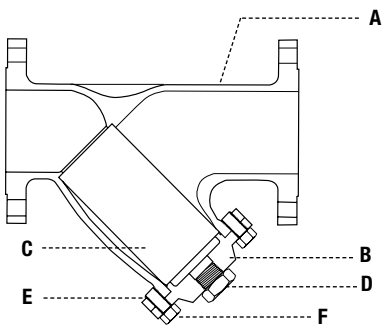

A	**Body**	Ductile Iron A395
B	**Cover**	Ductile Iron A395
C	**Screen**	304 Stainless Steel
D	**Plug**	Cast Iron, A126-B
E	**Bolt/Stud**	A307-B
F	**Nut**	A563

Pressure Drop vs. Flow

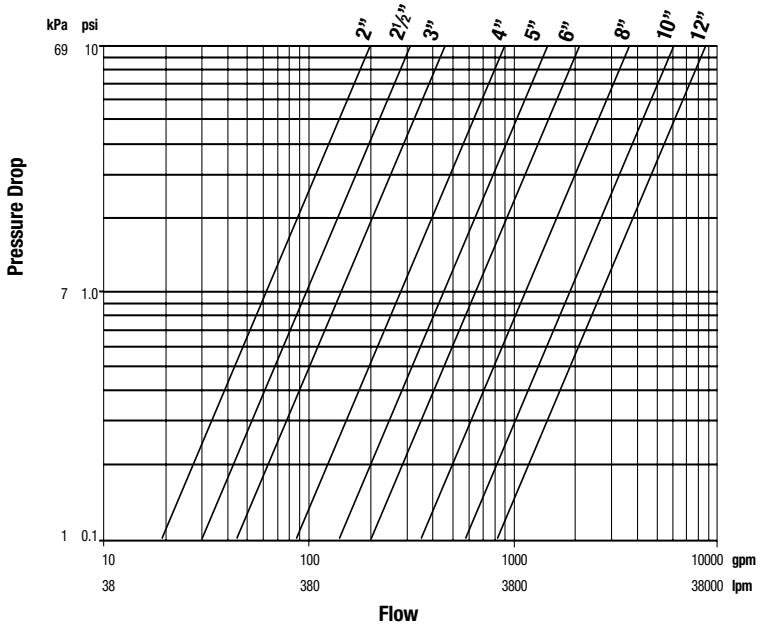

Dimensions – Weights

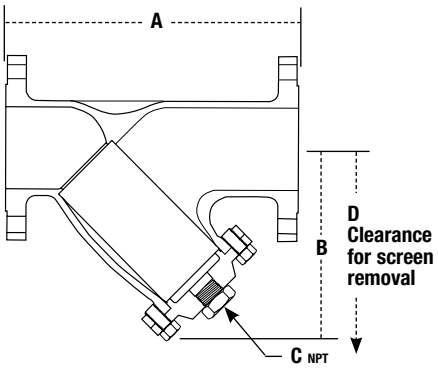

SIZE	DIMENSIONS								WEIGHT	
	A		B		C		D			
in.	*in.*	*mm*	*in.*	*mm*	*in.*	*mm*	*in.*	*mm*	*lbs.*	*kgs*
2	8⅞	226	6½	165	½	15	9⅛	232	28	13
2½	11¼	289	7	178	1	25	9⅞	251	38	17
3	11⅝	295	8	203	1	25	11¼	286	54	24
4	14½	368	10¾	273	1	25	15	381	110	50
5	17⅜	441	13½	343	1¼	32	19	483	160	73
6	18¾	476	16¼	413	1½	40	22¾	578	224	102
8	21⅞	556	19½	495	1½	40	27¾	692	468	212
10	27¼	692	21¼	540	2	50	29¾	756	590	268
12	31⅜	797	25	635	2	50	35	889	890	404

© 2013 Watts