REVISIONS					
ZONE	REV	DESCRIPTION	DATE	APPROVED	

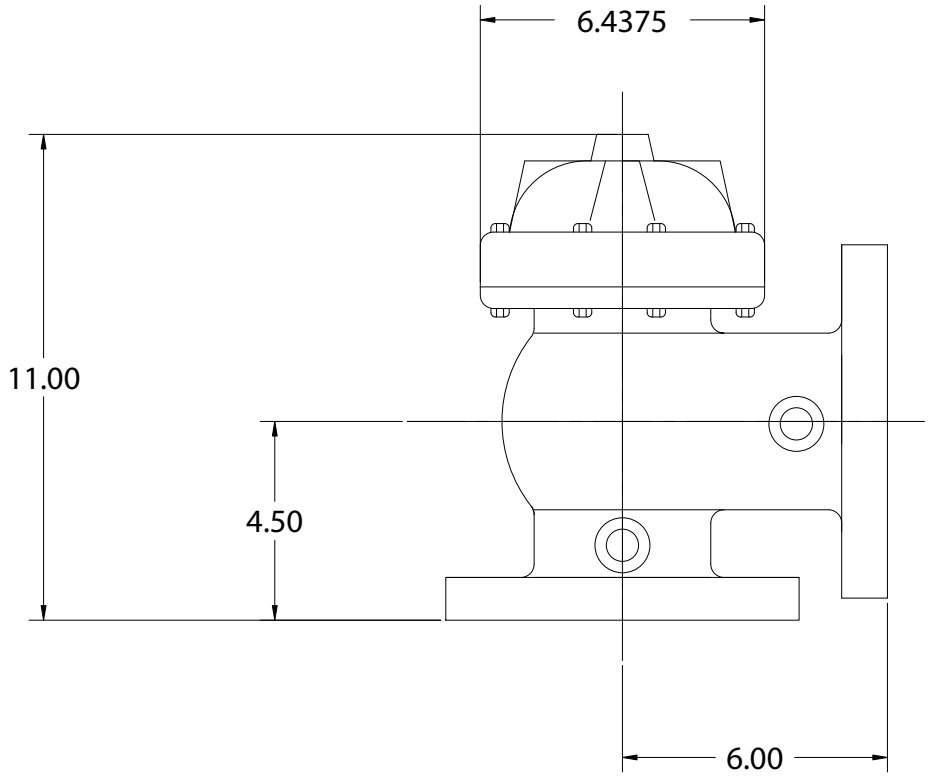

Weight: 44 lbs

UNLESS OTHERWISE SPECIFIED
DIMENSIONS ARE IN INCHES
TOLERANCES
DECIMALS ANGULAR
.XX + .05 ± 0.5 DEG.
.XXX + .01

DRAWN	DMITRIY POLISHCHUK	DATE 9-15-03
CHECKED		
DESIGN		

FLTR Purple Engineering

TITLE: 3" Flushing Valve

SIZE	DWG NO.	REV
A	3in flushing valve	0

SCALE 1:6 SHEET OF

For more information: **WEB**: FLTR.com.au **PHONE**: (+61) 1300 62 4020 **EMAIL**: info@FLTR.com.au **SKYPE**: Purple.Engineering