Coalescing Filters - to 740 psig

740psig @ -20 to 100°F
675psig @ -20 to 200°F

Series R40- Enameled Carbon Steel ◊ Series R42- 304 Stainless

- **Intake Air Flows to 150,000 SCFM Std.**
- **ASME U Stamp Std., Nat'l. Board Registered**
- **Pleated Element Design - Exceptional Useful Filter Area, Low ΔP, High Flow**
- **Hinged Flange w/Lift Lug Std., Service Access W/O Breaking Connections**
- **304SS Throat Safety Cages and ΔP Taps Std.**
- **Rugged Enameled Steel or 304SS Construction**

FLTR Purple Engineering

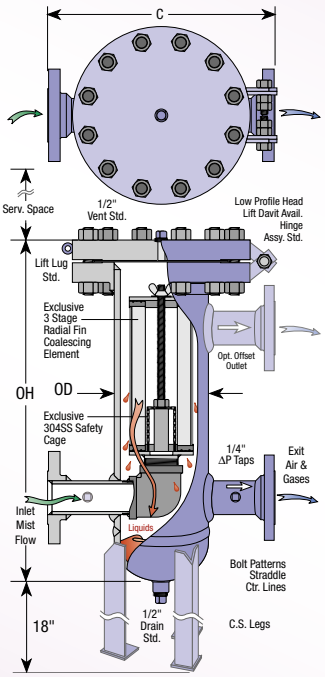

Series R40 coalescing pipeline filters are fabricated from rugged enameled carbon steel, (R42 are 304SS), designed, constructed, and stamped in accordance with ASME Boiler and Pressure Vessel Code requirements for unfired pressure vessels. Any model can be modified to more exactly fit your needs.

• Standard Connection Sizes from 1" to 12"

Male NPT or raised face flange in-line connections are std. Alternative orientations and sizes are available. An elevated discharge connection is shown below. A hinged blind face flange closure assembly with lift lug is standard.

• Coalescing Filter Media.

Sparks™ #907 media is composed of microfine borosilicate glass fibers bonded with phenolic resin. Together with a textile prefilter and a final drain layer, these pleated elements are remarkably effective at coalescing fine entrained oil and aqueous vapor mist from air/gas flows with very low ΔP. Experience has demonstrated high removal (over 90%) in dealing with 1.0 to 0.3μ aerosols. ***Other optional filter media such as #926 exceeds 95% removals.*** Individual performance will vary with the specific viscosity and vapor pressure of liquid contaminates.

• Options:

Models R40-0202-RF-020 and larger include CS leg supports. (add 18" to OH) Carbon steel support legs in any length, gauges, special finishes, and head lift assemblies are optional on any model. Call for information on vessels having other pressure services, 304SS, or other materials of construction.





Filters that saved a plant from shut down. *Two ASME code certified coalescing filter-separators solved a very serious problem. They now protect an existing downstream unit filled with costly molecular sieve (over $200,000) from liquid contamination in the gas stream. Together with a second Sparks™ filter-coalescer, this unit employs an automatic drain system and removes over 500 gallons of liquid per day with over 99% efficiency.*

Housing Model No.	Conn. Size	Conn. type	Cover Style	Dimensions in Inches				Wgt. Lbs.	Order Element No.
				OD	OH	C	Serv. Space		
R40-0200-MT-010	1"	MPT	Blind Flg.	6⅝	24	18	16	200	321-1439WK907
R40-0201-MT-015	1½"	MPT	Blind Flg.	6⅝	28	18	16	220	321-3235WK907
R40-0202-RF-020	2"	Flg.	Blind Flg.	8⅝	28	18	16	240	321-3236WK907
R40-0203-RF-030	3"	Flg.	Blind Flg.	8⅝	39	20	24	310	321-3237WK907
R40-0204-RF-040	4"	Flg.	Blind Flg.	10¾	42	24	24	500	321-3238WK907
R40-0205-RF-060	6"	Flg.	Blind Flg.	12¾	51	28	26	750	321-3239WK907
R40-0206-RF-080	8"	Flg.	Blind Flg.	16	66	30	36	1500	321-3240WK907
R40-0207-RF-100	10"	Flg.	Blind Flg.	20	76	36	36	2400	321-3241WK907
R40-0208-RF-120	12"	Flg.	Blind Flg.	24	78	42	39	3400	321-3242WK907

ΔP vs. Flow:

SparksFilters™ Series R40 Coalescing Pipeline Filters

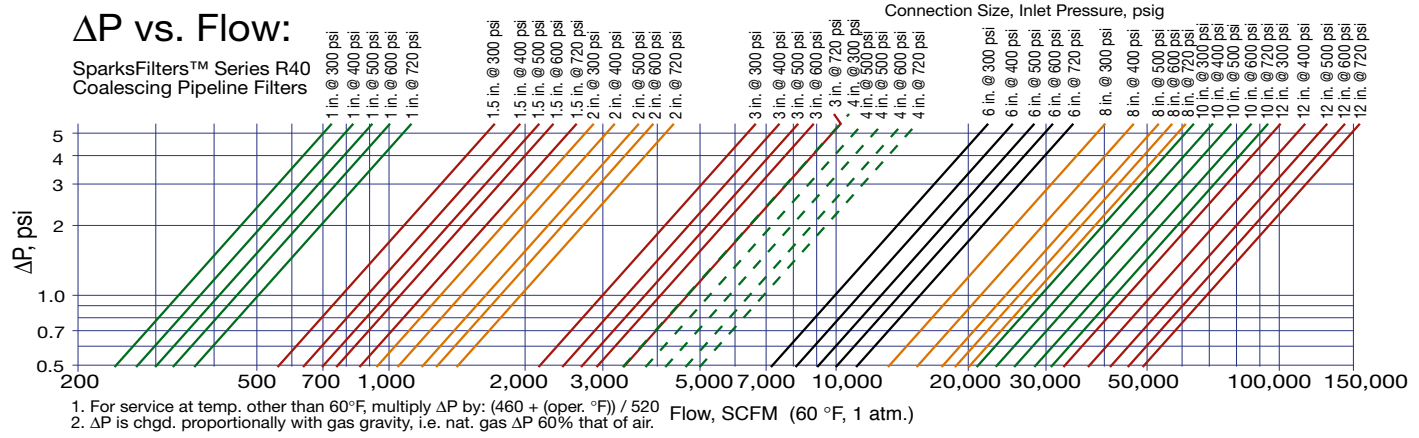

1. For service at temp. other than 60°F, multiply ΔP by: (460 + (oper. °F)) / 520
2. ΔP is chgd. proportionally with gas gravity, i.e. nat. gas ΔP 60% that of air.

For more information:

WEB: FLTR.com.au **PHONE**: (+61) 1300 62 4020 **EMAIL**: info@FLTR.com.au **SKYPE**: Purple.Engineering

Filter Vessel Options & Features

FLTR
Purple Engineering



O-Ring Closure (Hinge std.) Buna-N Gasket Std., Viton, Teflon coated, EPDM gaskets available.

Hinges w/lift ring std. above 35 lbs.



Lifting Davits Optional

Blind Flange Closure

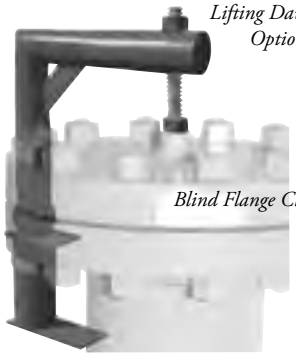

A Superior Finish! We use a high gloss enamel that has exceptional resistance to fungus, salt air, and alkalis. It is twice as costly as lesser paints. Some competitors use paints that are designed instead to hide welding and other fabrication defects. Our standard grey finish is used on all sheet metal filter housings. Pressure vessels have a special "clean white" interior finish. If you have special requirements for finishing, let us know.

Resistance To:

2 % HCL	*No Effect*
2 % NaOH	*No Effect*
5 % Acetic	*No Effect*
Lactic Acid	*No Effect*
Mineral Oil	*No Effect*
Salt Spray, 200 hrs.	*No Effect*
Flexibility 180° Mandrel,1/4"	*No Cracking*
Fungus Resistance per Fed. Spec. TTP-18, para. F-3g	*No Mildew*



Optional Low Profile Lifting Davit.





Removable perforated 304SS Safety Screen sits under (downstream of) filter element(s) to guard against lost pens, stray coins, and other undesirable items at time of filter element change out.

Our process and pipeline filters can be readily altered from standard design items, with special features and options to suit your requirements. This is a partial list of options. Call us with your special needs, we will be more than helpful.

- **Closures, Hinges & Optional Lifting Davits.**
  We offer an exceptional O-Ring closure design up to 175 psig, and Blind Flange closures operating above 175 psig. Hinges are std. for blind flanges weighing more than 35 lbs., and lifting davits are available as well. Other closure options such as Threaded or Ring Joint Flange are also available. Teflon coated studs and nuts are available.
- **Gauge Connections, Support Legs…**
  Legs are std. on many vessels. Differential pressure gauges, level gauges, and/or switches, adjustable support legs, pipe legs, special NDE (Non Destructive Examination …like X-ray), mixed metals of construction, ie. stainless steel clean side, and other requests to meet the needs of your specific service environment are available, just ask.
- **Superior Wall Thickness of Shells & Heads.**
  Minimum Schedule Std. Our 10" vessels have 0.365 walls where competitor's lesser drawn shells have only 0.120 to 0.130 walls. This means our vessels have much greater corrosion allowances, much more dependable closure seals, and eliminates shipping damage typical of drawn shell constructions.
- **Stainless Steel Safety Cages are standard.** These removable cages have saved many a maintenance person who might have dropped a wrench or pen when changing out a filter element.
- **Rust Inhibiting White Interior Enamel Standard !**
  Superior to clear coats. Everyone loves it! Sandblast and special finishes are available.
- **Vessels Through 16" Diameter in a Hurry !**
  Our rapid 2 to 4 week delivery is legend!
- **Detailed Approval Drawings are Fast!**
  Normally in a week, 2 weeks max. for complex requirements. (Yes, We do the tuff stuff! Try us.) We are very flexible on special orders and design modifications. Our non-code vessels are made from the same materials, quality and welding as our code vessels.
- **ASME Code Stamp**
  Our companion organization, Rush Certified, Inc., is fully certified to provide the ASME Boiler & Pressure Vessel Code "U" Stamp as required by most states for unfired pressure vessels exceeding 15 psig. Each vessel is registered with the National Board of Boiler Pressure Vessel Inspectors. Our code stamp allows design service to 3000 psig.

Most jurisdictions (see table) require certain vessels to comply with the ASME Code. It is the responsibility of the end user to verify the requirements within their jurisdiction, and to advise if vessels are to contain lethal substances, i.e. poisonous gases or liquids of such nature that very small amounts could be dangerous to life (mixed or unmixed with air). ASME Code Section VIII Div. 1 covers pressure vessels for containment of internal or external pressure (vacuum). You should consider need for ASME Cert. when:

(A) Vessels have an internal or external operating pressure of greater than 15 psi max. (no size limitation) or

(B) Vessels have an inside diameter of greater than 6 inches, without limitation on length or pressure.

* Only portions of code.

Tabulation of the Boiler & Pressure Vessel Laws of the US & Canada Jurisdiction VIII(1)

AL ..... Y	MO ..... Y	WV ..... N
AK ..... N	MT ..... N	WI ..... Y
AZ ..... N	NB ..... Y	WY ..... Y
AR ..... Y	NV ..... Y	Alb. ..... Y
CA ..... Y	NH ..... Y	B.C. ..... Y
CO ..... Y	NJ ..... Y	Man ..... Y
CT ..... N	NM ..... N	N.B. ..... Y
DE ..... Y	NY ..... Y	N.F.&L ..... Y
FL ..... N	NC ..... Y	NW.T. ..... Y
GA ..... Y	ND ..... Y	N.S. ..... Y
HI ..... Y	OH ..... Y	Ont. ..... Y
ID ..... Y	OK ..... Y	PE Is ..... Y
IL ..... Y	OR ..... Y	Que ..... Y
IN ..... Y	PA ..... Y	Sas ..... Y
IA ..... Y	PR ..... Y	Y.Ter ..... Y
KS ..... Y	RI ..... Y	Albuquerque .. N
KY ..... Y	SC ..... N	Des Moines.... N
LA ..... N	SD ..... N	Miami ..... Y
ME ..... Y	TN ..... Y	New Orleans ... Y
MD ..... Y	TX ..... N	Tucson ..... Y
MA ..... Y	UT ..... Y	Univsty Cty ..... Y
MI ..... Y*	VT ..... Y	Dade Co. ..... Y
MN ..... Y	VA ..... Y	Jeff Parish..... Y
MS ..... Y	WA ..... Y	St Louis Co..... Y
		Dist.of Clmb.... Y

For more information:

WEB: FLTR.com.au **PHONE**: (+61) 1300 62 4020 **EMAIL**: info@FLTR.com.au **SKYPE**: Purple.Engineering

FLTR
Purple Engineering

- The service space requirements are shown on the sales drawing for your project. Ample space should also be allowed for easy access, disassembly, and inspection of the filter and its components.
- The filter should be mounted in a upright vertical position with the legs on a level foundation. To prevent movement the legs may be bolted or lagged. Small or special design filters may be mounted or supported by other means with the consent of the factory.
- Special care should be taken in the design and installation of the piping to the filter. The piping system should be sufficiently sized to minimize ΔP. Most piping systems are sloped to accessible drain points.
- Instrumentation of some type is common for most filter systems in the form of gauges, sensors and/or switches. The use of instruments can save time and money reducing visual inspections. Typical change out is between 5 & 10 PSI differential.
- All systems should be carefully pressure tested, inspected, and cleaned before being placed in service. Many process systems require special purging or pickling, and may require filter changes or special start-up cartridges for this procedure.

ASME U Stamp: Yes / No ____
Gas Type: ____ Air _____ Nat Gas _____other
Gas Spec. Grav.: _____ (if other than air)
Flow:
Normal Flow:..... _____ SCF/ _____(Min., Hr., Day)
Maximum Flow:..... _____ SCF/ _____(Min., Hr., Day)
Connections:
Inlet Size..... _____ Inch
Inlet Type..... _____ (MPT, Flange & Type, etc)
Outlet Size..... _____ Inch
Outlet Type..... _____ (MPT, Flange & Type, etc)
Outlet elevation ..... _____ inches above inlet C.L.
..... (std. is same C.L.)
Inlet Location..... _____ (std is @ 90°)
Outlet Location..... _____ (std is @ 270°)
Materials of Construction:
Carbon Steel ..... _____ (Yes / No)
304L ..... _____ (Yes / No)
316L ..... _____ (Yes / No)
other:..... _____
Pressure:
Design Pres..... _____ PSIG
Operating Pres. ..... _____ PSIG
Flange Rating ..... _____ ANSI
Temperature:
Design Temp. ..... _____ ° F
Operating Temp..... _____ ° F
Other Ports:
Vent Size, inch..... _____ Type: _____
Drain Size, inch ..... _____ Type: _____
ΔP Taps Size, inch.. _____ Type: _____
Cover Options:
w/Hinge & Lug ..... _____ (Yes / No)
w/HeadLift Davit..... _____ (Yes / No)
Legs: (std is 3 @ 90°, 210°, 330°) _____ (3 or 4)
Tank Gasket:
Std..... _____ (Yes / No)
other..... _____
Filter Element:
Cat. No. ..... _____
Reten. Needed ..... _____ μ (micron)

Select either Hinged Swing Bolt Closure Shown Above, or Hinged Flange Closure shown below.

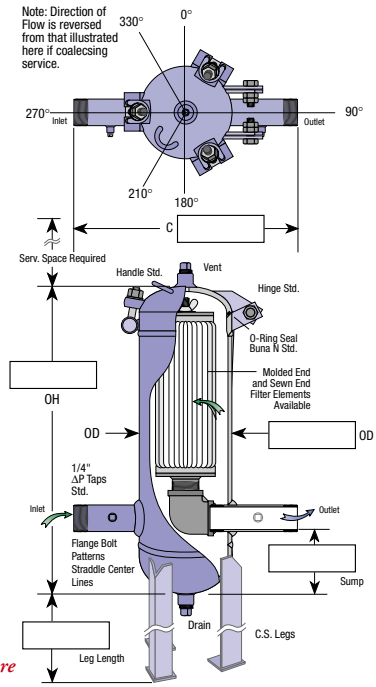

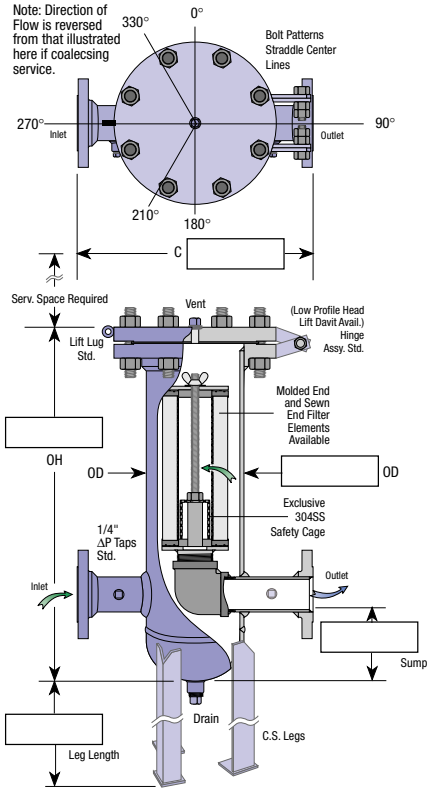

Details & Special Requirements: _____

_____

_____

_____

_____

_____

_____

_____

For more information:

WEB: FLTR.com.au **PHONE**: (+61) 1300 62 4020 **EMAIL**: info@FLTR.com.au **SKYPE**: Purple.Engineering